Made in TURKIYE

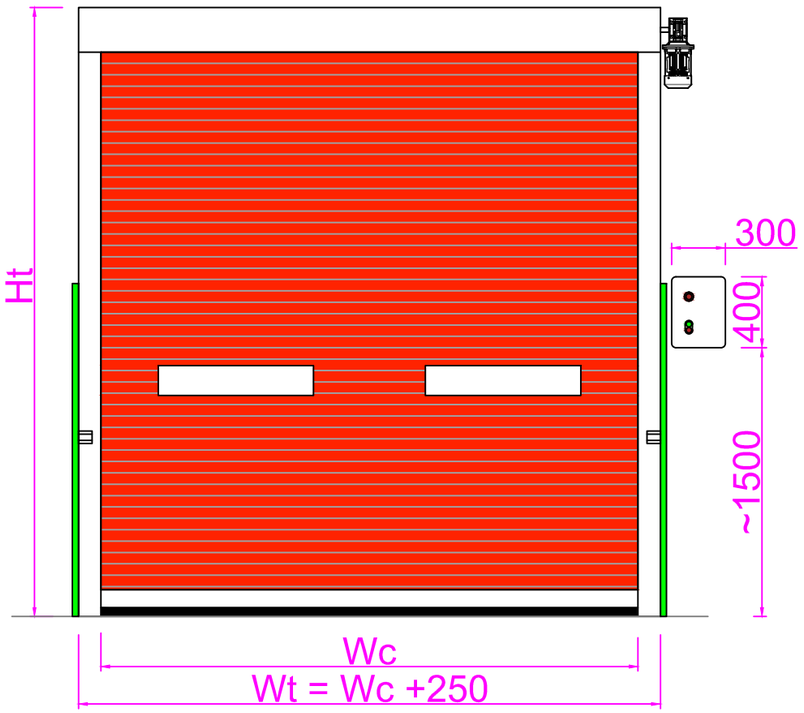


**Front View (Closed)**

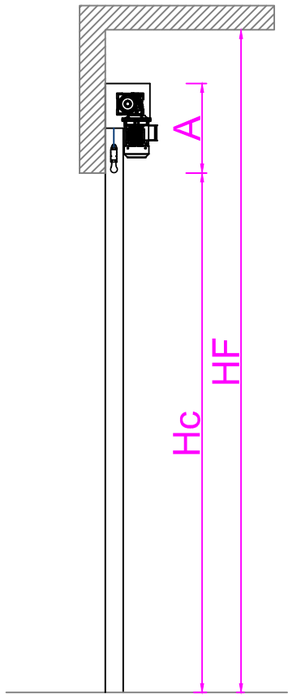


**Section View**

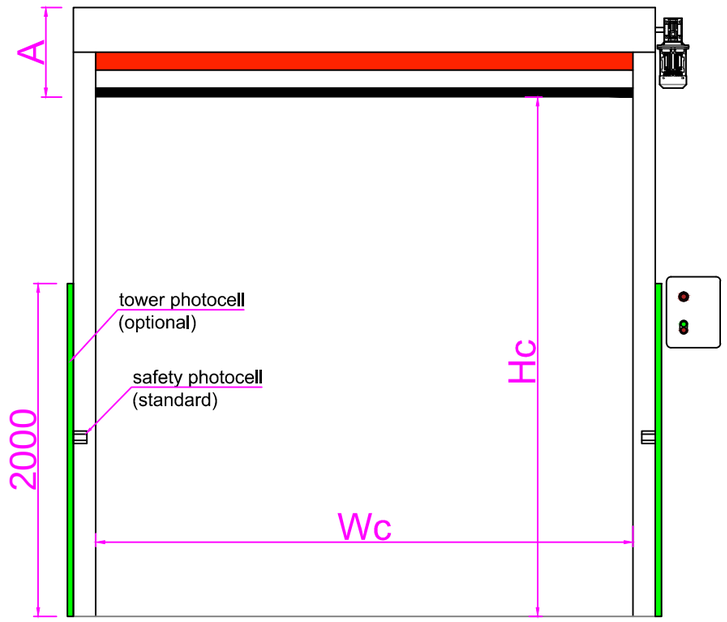


**Front View (Opened)**

| Clear Height (Hc) | Headroom (A) |
|---|---|
| Hc < 2100 | 550 mm |
| 2100 ≤ Hc < 3300 | 600 mm |
| 3300 ≤ Hc | 600 mm |

Headroom sizes vary according to the height of the door.

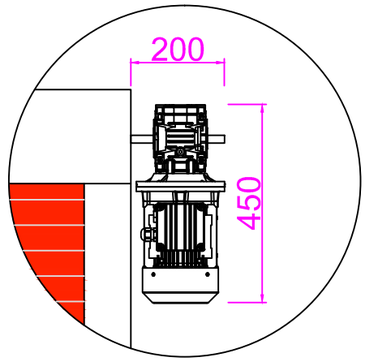


**Motor Detail**

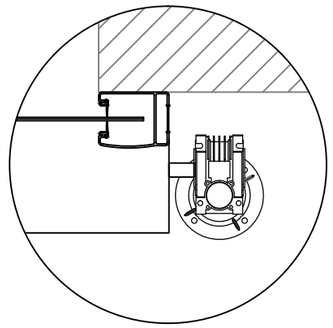

**Guiding Detail**

*PLEASE SELECT THE PLAN DETAIL TYPES*

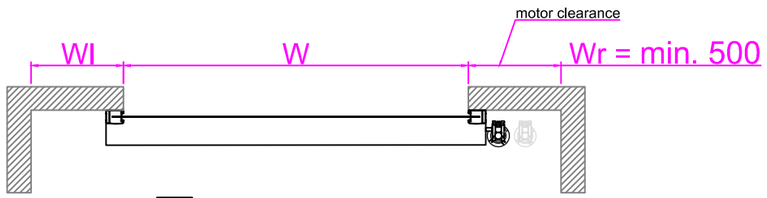


☐ **BOTH SIDES FREE**
**Clear Width (Wc) = W**

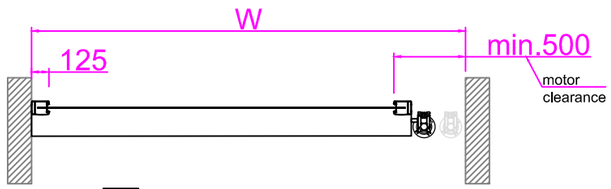


☐ **WALL ON BOTH SIDES**
**Clear Width (Wc) = W - 625**

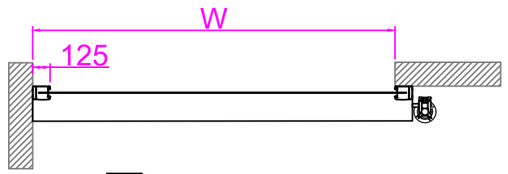


☐ **ONE SIDE FREE**
**Clear Width (Wc) = W - 125**

| | | | |
|---|---|---|---|
| **Proje Adı / Project Name :** | | | |
| **Ürün Adı / Product Name :** | PVC HYBRID DOOR | | |
| ***ÖLÇÜLER / DIMENSIONS*** | | | |
| W (mm) | | Hc (mm) | |
| Wl (mm) | | Ht (mm) | |
| Wr (mm) | | Hf (mm) | |
| Wt (mm) | | | |

| ***Miktar Quantity*** |
|---|
| .....pcs. |

NOTES:
* In the selection of galvanized body, guides are produced with a width of 100 mm.
* Headroom sizes vary according to the height of the door.
* standard safety equipments : safety photocell
* button control on the control panel (standard)
* inverter control panel (standard)
* external button is included in the standard package

| Motor Yeri Motor Location | | |
|---|---|---|
| Left | Center | Right |
| | Unavailable | |

| Branda Rengi Fabric Color | | | |
|---|---|---|---|
| L.Grey RAL 7038 | D.Grey RAL 7046 | L.Blue RAL 5015 | Black |
| | | | |
| Orange RAL 2009 | Green RAL 6005 | Beige RAL 1014 | White |
| | | | |
| D.Blue RAL 5002 | Red RAL 3002 | Yellow RAL 1003 | Other |
| | | | |

| Pencere Window | |
|---|---|
| Available | N/A |
| | |

| Metal Aksam Body Structure | |
|---|---|
| Aluminium (Standard) | Galvanised (Optional) |
| | |

| Kontrol ve Güvenlik Control and Safety Options | |
|---|---|
| Pull Down Switch | Motion Dedector |
| | |
| Remote | Loop Dedector |
| | |
| Tower Photocell | Other |
| | |

| Voltaj Seviyesi Voltage Spec. | |
|---|---|
| Monophase (V) | |
| Triphase (V) | |
| Frequency (Hz) | |
| Neutral (Yes/No) | |
| | |